STANDARD VERSION

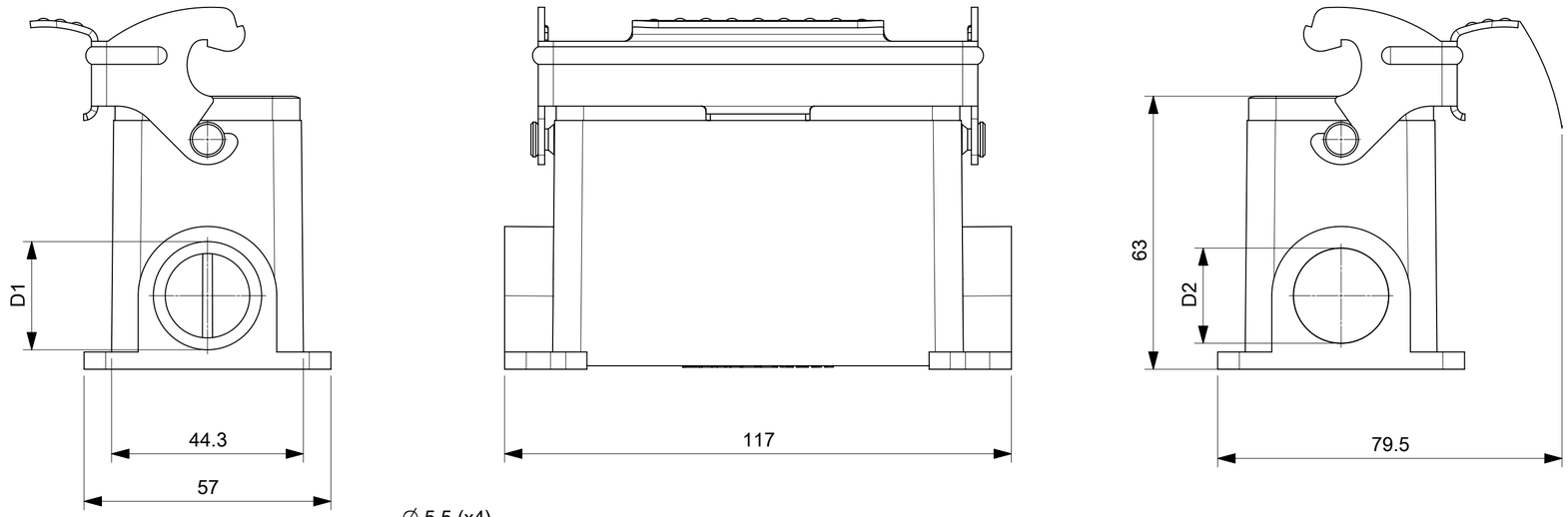

STANDARD HIGH VOLTAGE VERSION

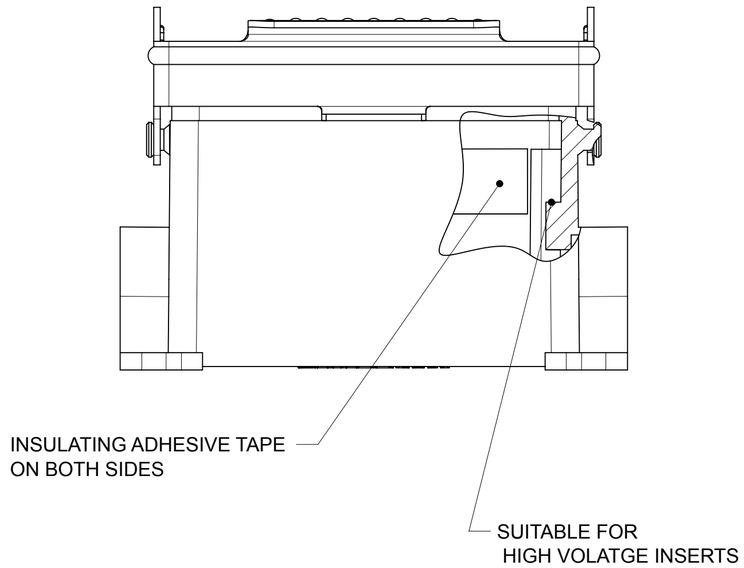

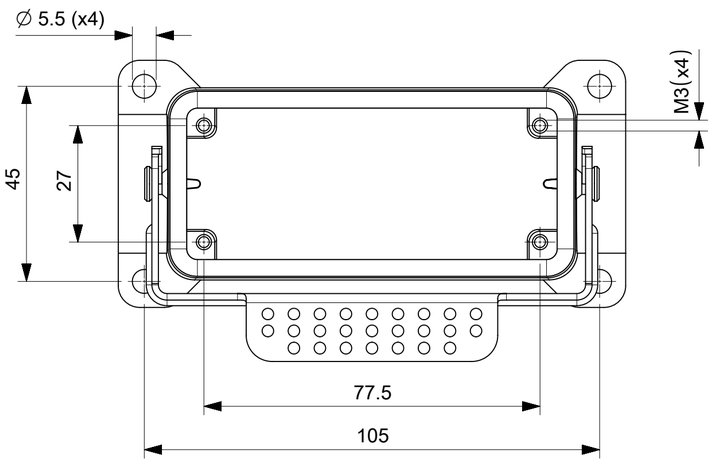

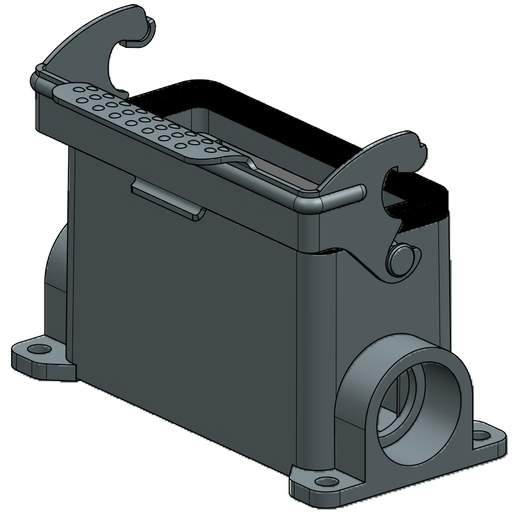

SAP.No.	Eng.No.	TYPE	D1	D2
936012549	7816.6355.0	STANDARD	M25	-
936012552	7816.6356.0	STANDARD	M25	M25
936012527	7816.6305.0	STANDARD	Pg21	-
936012530	7816.6306.0	STANDARD	Pg21	Pg21
936012551	7816.6355.2	STANDARD HIGH VOLTAGE	M25	-
936012554	7816.6356.2	STANDARD HIGH VOLTAGE	M25	M25
936012529	7816.6305.2	STANDARD HIGH VOLTAGE	Pg21	-
936012532	7816.6306.2	STANDARD HIGH VOLTAGE	Pg21	Pg21

THIS DRAWING CONTAINS INFORMATION THAT IS PROPRIETARY TO MOLEX ELECTRONIC TECHNOLOGIES, LLC AND SHOULD NOT BE USED WITHOUT WRITTEN PERMISSION

SYMBOLS: E = 0; E = 0; E = 0; S = 0; ▼ = 0; C = 0; ☒ = 0; ■ = 0; ▽ = 0

DIMENSION UNITS: mm — SCALE: 1:1

GENERAL TOLERANCES (UNLESS SPECIFIED)

ANGULAR TOL	± °
4 PLACES	±
3 PLACES	±
2 PLACES	±
1 PLACE	±
0 PLACES	±

DRAFT WHERE APPLICABLE MUST REMAIN WITHIN DIMENSIONS

CURRENT REV DESC:

EC NO: 176847
DRWN: AKHEMIRI 2018/04/23
CHK'D: DMERONI 2018/05/16
APPR: AMELZI 2018/05/17

INITIAL REVISION:
DRWN: AKHEMIRI 2018/04/23
APPR: AMELZI 2018/05/17

FIRST ANGLE PROJECTION | DRAWING: A2-SIZE | SERIES: 93601

molex

16B STANDARD AND HIGH VOLTAGE
SURFACE HOUSING 1 LEVER

PRODUCT CUSTOMER DRAWING

DOCUMENT NUMBER	DOC TYPE	DOC PART	REVISION
936012551	PSD	000	A

MATERIAL NUMBER	CUSTOMER	SHEET NUMBER
SEE TABLE	GENERAL MARKET	1 OF 1

DOCUMENT STATUS	P1	RELEASE DATE	2018/05/17 10:15:30

FORMAT: master-tb-prod-A2
REVISION: H
DATE: 2017/10/06